PRODUCT INFORMATION PACKET

Model No: 5KC49TN2141X
Catalog No: C338
General Purpose Pump Motor, 2 HP, 1 Ph, 60 Hz, 115/208-230 V, 56C Frame, DP

Regal and LEESON are trademarks of Regal Rexnord Corporation or one of its affiliated companies.
©2025 Regal Rexnord Corporation, All Rights Reserved. MC017097E

Nameplate Specifications

Phase	1	Output HP	2 Hp
Output KW	1.5 kW	Voltage	115/208-230 V
Speed	3450 rpm	Service Factor	1.20
Frame	56C	Enclosure	Drip Proof
Thermal Protection	Automatic	Ambient Temperature	40 °C
Frequency	60 Hz	Current	21.2/11.5-10.6 A
Power Factor	0	Duty	Continuous
Insulation Class	B	Design Code	L
KVA Code	J	Drive End Bearing Size	6203
Opp Drive End Bearing Size	6203	UL	Recognized
CSA	Y	CE	N

Technical Specifications

Electrical Type	Capacitor Start Induction Run	Starting Method	Across The Line
Poles	2	Rotation	Selective Counterclockwise
Motor Orientation	Any	Drive End Bearing	Locked
Opp Drive End Bearing	Ball	Frame Material	Rolled Steel
Shaft Type	NEMA 56C	Shaft Diameter	0.625 in
Outline Drawing	52A109651P1	Connection Drawing	52A105383AA

This is an uncontrolled document once printed or downloaded and is subject to change without notice. Date Created:11/13/2025

Uncontrolled Copy

RBC PROPRIETARY AND CONFIDENTIAL INFORMATION

This document is the property of REGAL BELOIT Corporation ("RBC") including its subsidiaries and divisions and contains proprietary information of RBC. This document is loaned on the express condition that niether it nor the information contained therein shall be disclosed to others without the express written consent of RBC Motors, and that the information shall be used by the recipient only as approved expressly by RBC Motors. This document shall be returned to RBC upon its request. This document may besubject to certain restrictions under U.S. export control laws and regulations.

REV 2 | SH 1 | DWG NO 52A109651 | SIZE A

REVISIONS

REV	DESCRIPTION	DATE	APPROVED
2	"WATER SLINGER" ADDED PER "ISII-5119"	12/05/2011	KOTI

THIRD ANGLE PROJECTION

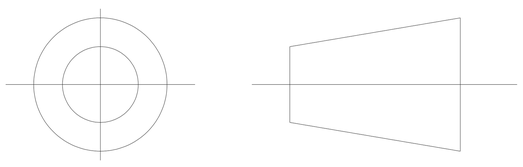

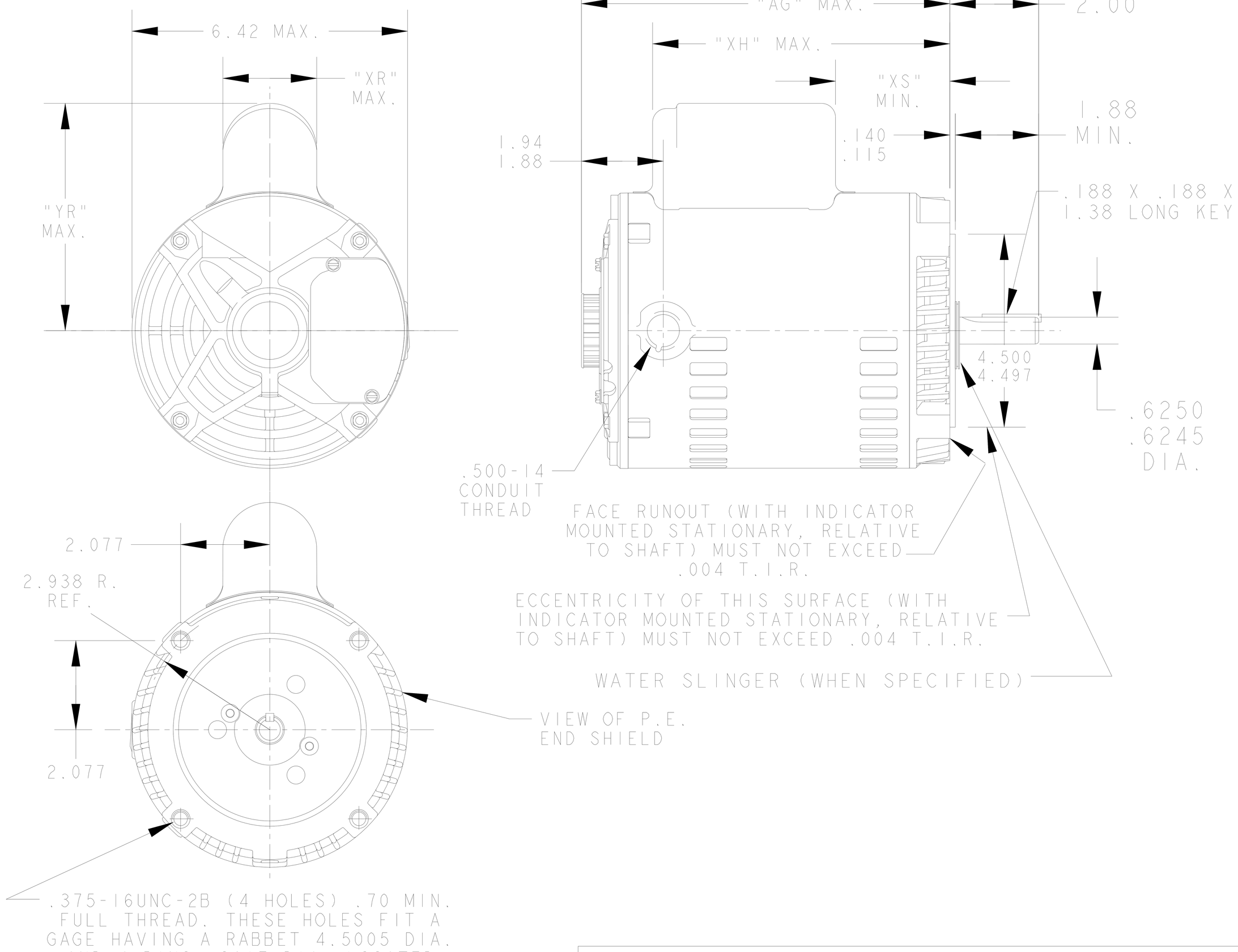

ALL DIMENSIONS ARE IN INCHES

P	TYPE	GE SIZE	NEMA FR.	"C"	"AG"	"XH"	"YR"	"XR"	"XS"		MIN. SHELL
1	KC	49	56C	13.22	11.10	8.92	5.44	2.40	3.17		8.99

UNLESS OTHERWISE SPECIFIED	SIGNATURES	DATE
DIMENSIONS ARE IN INCHES	DRAWN M.D.PAPE	07/25/94
TOLERANCES ON:	CHECKED	
2 PL DECIMALS ±		
3 PL DECIMALS ±	ENGRG	
ANGLES ±		
FRACTIONS ±	ISSUED M.D.PAPE	07/25/94
MATERIAL:		
	CAD NO. F40:52A109651	
APPLIED PRACTICES:	FILE - 0-106C	

REGAL BELOIT

REGAL-BELOIT CORPORATION

TITLE OUTLINE

GENERAL PURPOSE MOTOR
DRIP PROOF
BALL BEARING
R2 END MOUNTED

FMF:

SIZE	FSCM NO	DWG NO
A	0125	52A109651

SCALE .25:1 | SHEET 1 OF 1

F114(4),B201,J10(4),J11,J12(5)

DISTR TO

52A105383AA

EITHER ROTATION, DUAL VOLTAGE, TYPE KC OR KH, WITH THERMAL PROTECTION

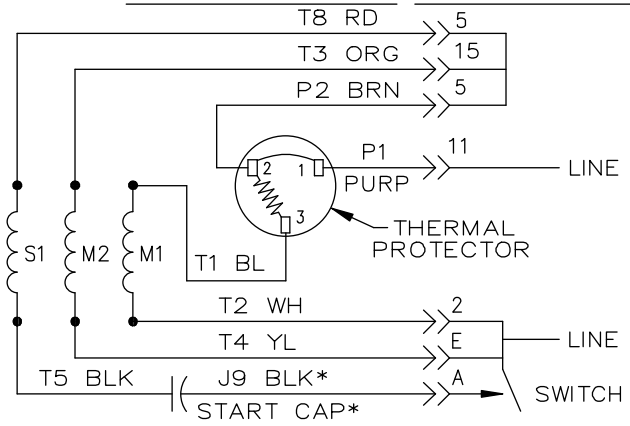

LOW VOLTAGE CONNECTION

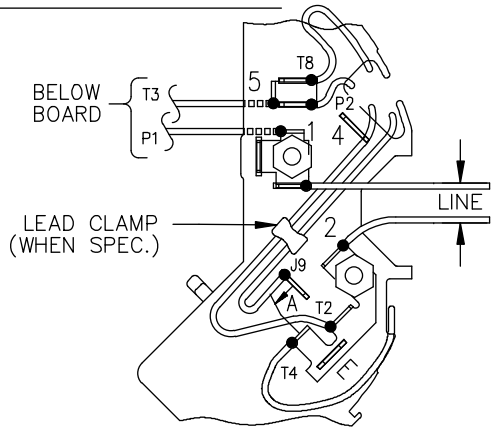

SWITCH BOARD CONNECTION

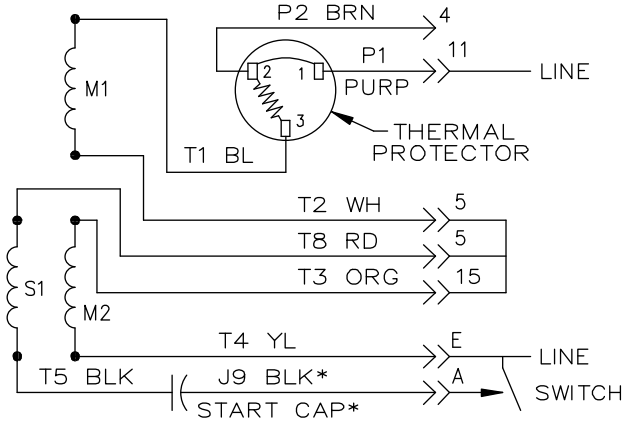

HIGH VOLTAGE CONNECTION

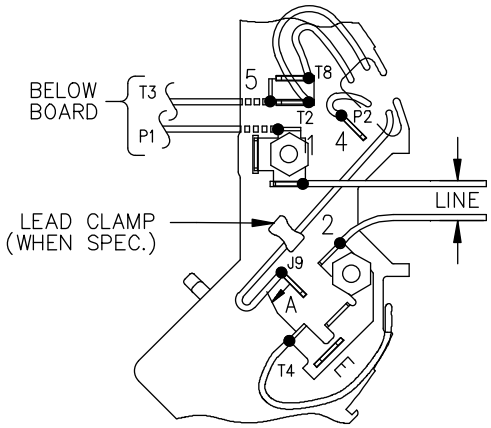

SWITCH BOARD CONNECTION

NOTE #1 – START CAP & J9 WHEN SPECIFIED (*). IF NO CAPACITOR (KH), CONNECT T5 DIRECTLY TO SWITCH (A). WHEN MORE THAN ONE CAPACITOR IS USED, CONNECT IN PARALLEL.

NOTE #2 – TO REVERSE ROTATION, INTER CHANGE RD(T8) AND BLK(J9–KC OR T5–KH) LEADS.

SWITCH REF. – 115D958AB	CONNECTION LABEL	CCW ROTATION: NP52X332051AA
		CW ROTATION: NP52X332051AC

NO.	REVISION	BY & DATE	CHK
5	ADDED CONNECTION LABEL PER ECO–0030779	UD 02/06/13	PKG
4	UPDATED PER IS07–0150	MD 01/23/07	

TOLERANCES UNLESS SPECIFIED

DEC.	INCHES
.X	±0.1
.XX	±0.02
.XXX	±0.005
.XXXX	±0.0005
ANG	±1.0

REGAL BELOIT — REGAL-BELOIT CORPORATION

TITLE: CONNECTION DIAGRAM
30 FRAME SWITCH REDESIGN

MAT'L.
FINISH
RFP
DIST
CAD FILE 52A105383AA

DRAWN M.D.P 06/29/87
CHK
APPD M.D.P 03/26/96
SCALE 1=1
REF
FMF
PREV

SIZE A | DRAWING NO. 52A105383AA | REV. 5

THIS DRAWING IN DESIGN AND DETAIL IS OUR PROPERTY AND MUST NOT BE USED EXCEPT IN CONNECTION WITH OUR WORK ALL RIGHTS OF DESIGN AND INVENTION ARE RESERVED
THIS IS AN ELECTRONICALLY GENERATED DOCUMENT – DO NOT SCALE THIS PRINT

2/6/2013 9:06:09 AM - Converted by Connexus