PRODUCT INFORMATION PACKET

Model No: 5KCR48TN2650Y
Catalog No: 9035
Air Compressor Motor, 2 HP, 1 Ph, 60 Hz, 120/240 V, 56 Frame, DP

Regal and LEESON are trademarks of Regal Rexnord Corporation or one of its affiliated companies.
©2025 Regal Rexnord Corporation, All Rights Reserved. MC017097E

Nameplate Specifications

Phase	1	Output HP	2 Hp
Output KW	1.5 kW	Voltage	120/240 V
Speed	3450 rpm	Service Factor	1
Frame	56	Enclosure	Drip Proof
Thermal Protection	Manual	Ambient Temperature	40 °C
Frequency	60 Hz	Current	15.0/7.5 A
Duty	Continuous	Insulation Class	B
KVA Code	G	Drive End Bearing Size	6203
Opp Drive End Bearing Size	6203	UL	Recognized
CSA	Y	CE	N

Technical Specifications

Electrical Type	Capacitor Start Capacitor Run	Starting Method	Across The Line
Poles	2	Rotation	Clockwise/Counterclockwise
Motor Orientation	Any	Drive End Bearing	Ball
Opp Drive End Bearing	Ball	Frame Material	Rolled Steel
Shaft Type	NEMA 56	Shaft Diameter	0.625 in
Outline Drawing	52A107782P8	Connection Drawing	52A105383AB

This is an uncontrolled document once printed or downloaded and is subject to change without notice. Date Created:11/13/2025

SHEET 1 | REV 16 | 52A107782 | SIZE A | DRAWING NO.

THIRD ANGLE PROJECTION

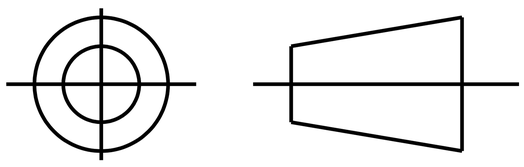

REVISIONS

REV.	DESCRIPTION	DATE	APPROVED
15	CHD. PT#11 PER START CAP. CHD.	07/19/12	KARTHIK
16	REPRESENTED O/L IN SIDE VIEWS AND CHANGED PART #11 DIM'S PER SAMPLE DS12-3611	08/22/12	RAJESH

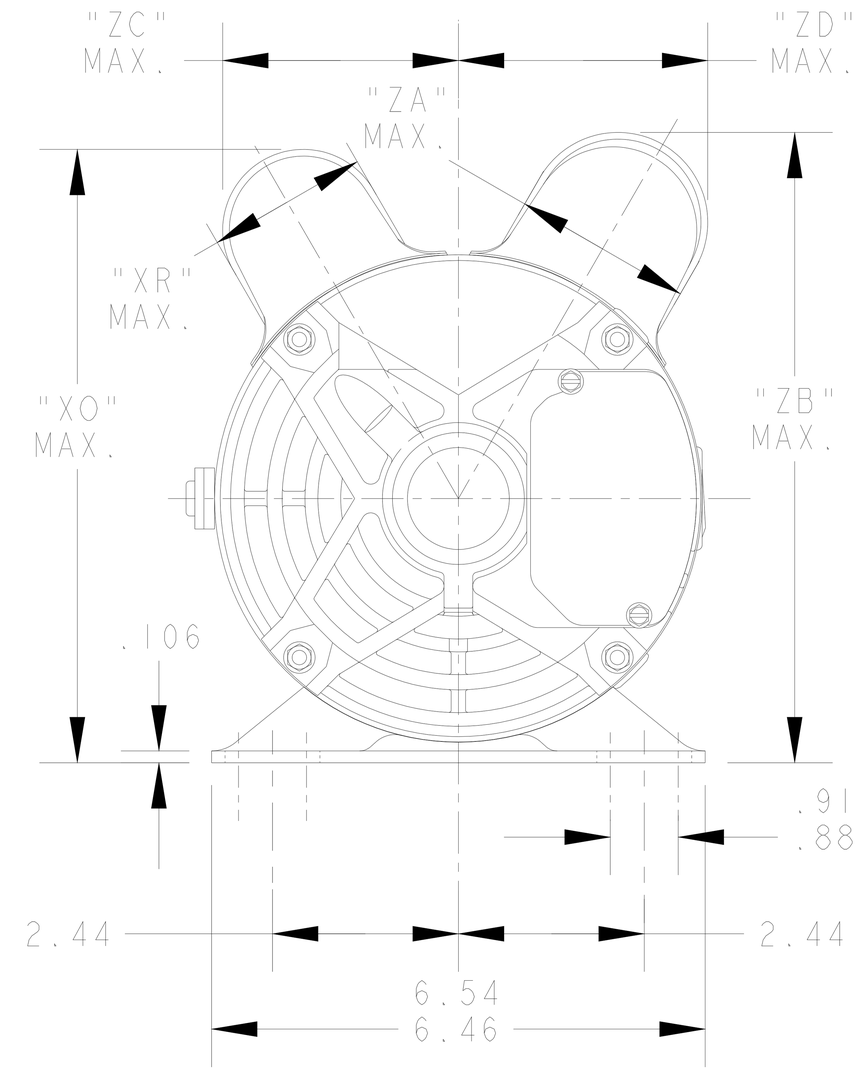

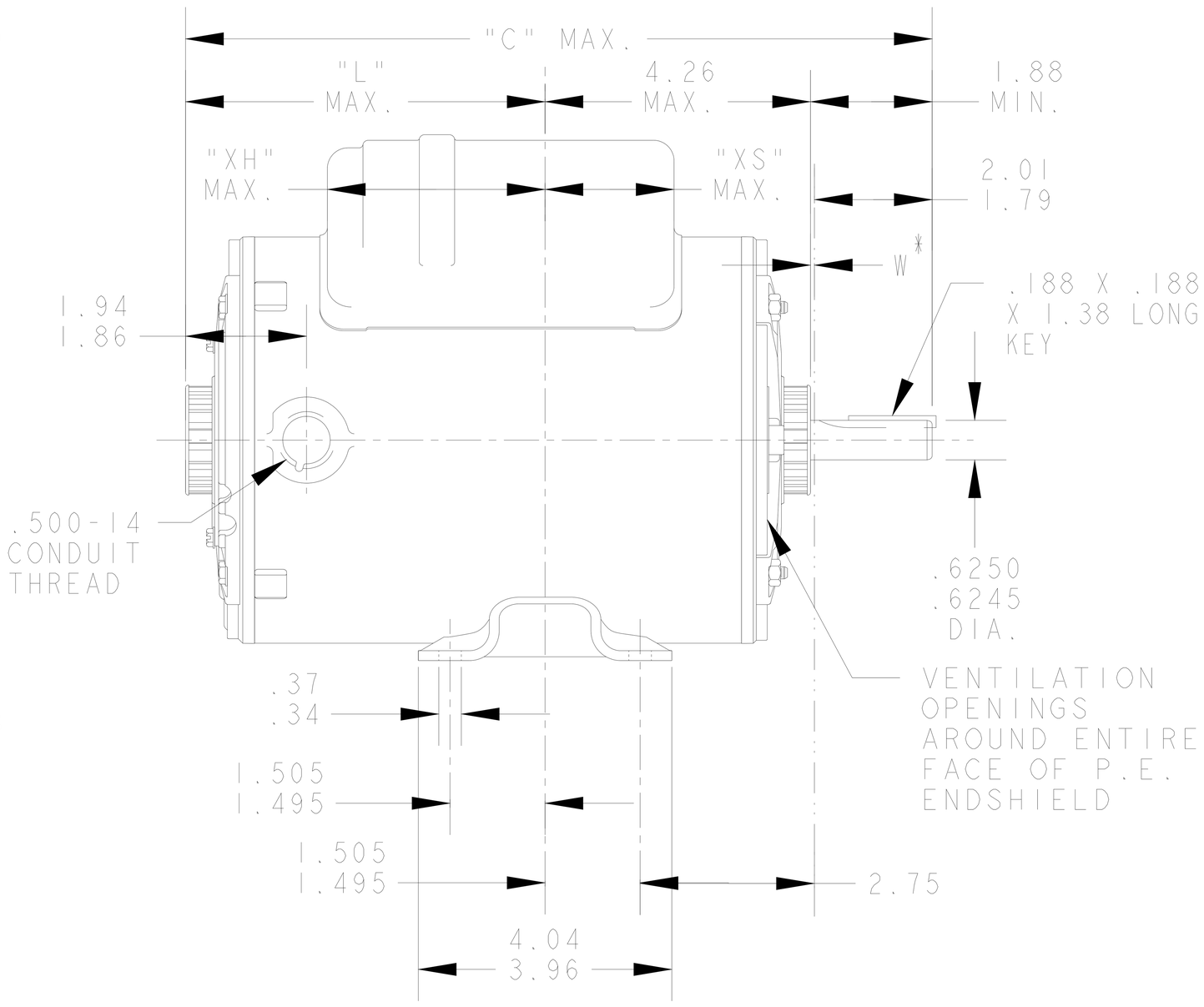

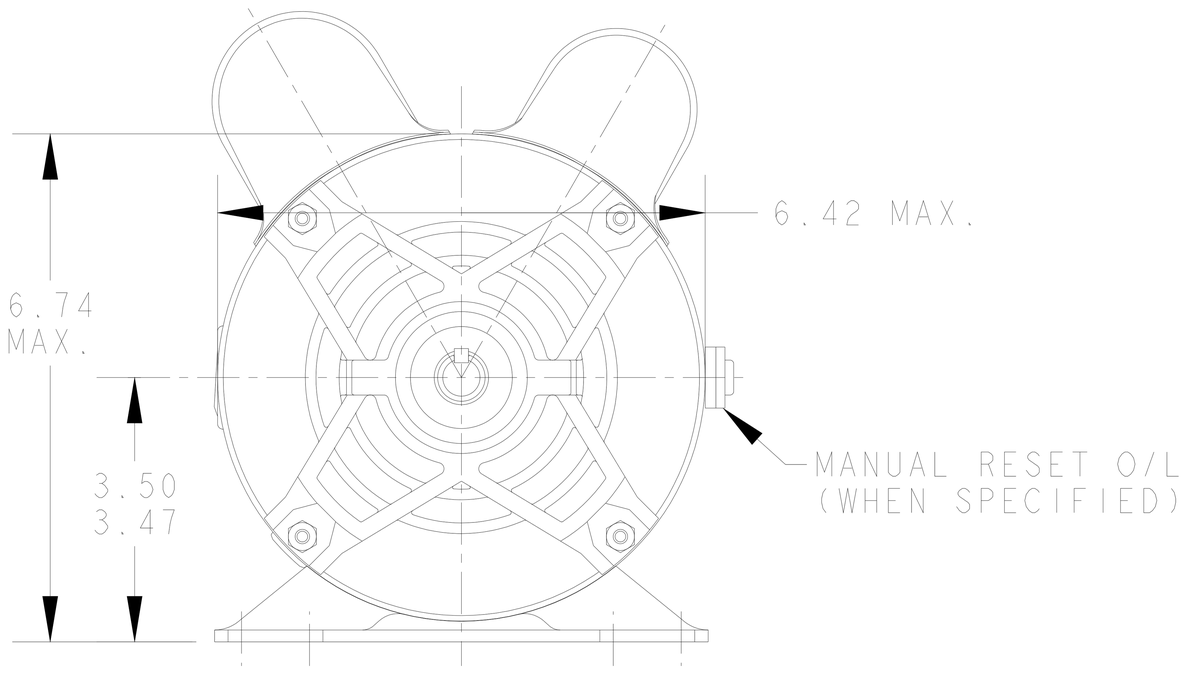

VIEW OF P.E. END SHIELD

*W IS A VARIABLE CLEARANCE DUE TO VARIATIONS IN PARTS AND ASSEMBLY

NOTE: PARTS ARE ADDED IN SHEET 2

SIGNATURES		DATE
MODEL	M.D.PAPE	03/02/92
DETAIL	.	.
CHECKED	.	.
ENGRG	.	.
MFG	.	.
QUALITY	.	.
ISSUED	M.D.PAPE	08/14/02
SOLID MODEL: 52A107782		

FOR ADDITIONAL INFO REFER TO:
APPLIED PRACTICES .
DIMENSIONS ARE IN INCHES
MATERIAL .

REGAL BELOIT

REGAL-BELOIT CORPORATION

TITLE

OUTLINE

GENERAL PURPOSE MOTOR - DRIP PROOF - BALL BEARING - WELD BASE

SIZE	DRAWING	REV
A	52A107782	16

SCALE: 0.003 | REF. No: . | SHEET 1 OF 2

SHEET 2 | REV 16 | 52A107782 | DRAWING NO. | SIZE A

THIRD ANGLE PROJECTION

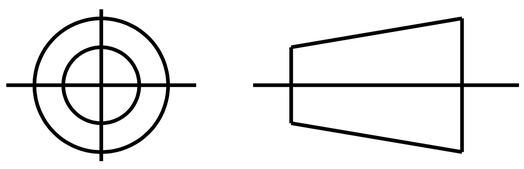

REVISIONS

REV.	DESCRIPTION	DATE	APPROVED
10	ADDED PART# 8&9 PER DS07-0570&0571	05/23/07	BOMMU
11	'XS' FOR PT#9 WAS 1.43	08/03/07	DURGA
12	CAP COVER CHG AS PER IS07-1231	09/21/07	BALA
13	ADDED PT# 10 PER SAMPLE DS09-1939	12/31/09	PRAVEEN.K
14	ADDED PT# 11 PER IS11 - 0065	01/07/11	KARTHIK
15	CHD. PT#11 PER START CAP. CHD.	07/19/12	KARTHIK
16	REPRESENTED O/L IN SIDE VIEWS AND CHANGED PART #11 DIM'S PER SAMPLE DS12-3611	08/22/12	RAJESH

P	TYPE	RBC SIZE	NEMA FR	"C"	"L"	"XH"	"XO"	"XR"	"XS"	"ZA"	"ZB"	"ZC"	"ZD"	MIN. SHELL
11	KCR	49	56	13.22	7.06	4.07	8.40	2.33	1.53	2.70	8.53	3.38	3.94	8.99
10	KCR	49	56	13.22	7.06	4.40	8.18	2.15	1.20	2.40	8.40	3.20	3.38	8.99
9	KCR	48	56	12.66	6.50	4.32	8.18	2.15	2.08	2.40	8.40	3.20	3.38	8.43
8	KCR	48	56	12.66	6.50	4.32	8.18	2.15	1.43	2.15	8.18	3.20	3.20	8.43
7	KCR	48	56	12.66	6.50	4.32	8.40	2.40	1.43	2.15	8.18	3.38	3.38	8.43
6	KCR	48	56	12.66	6.50	4.32	8.40	2.40	1.43	2.15	8.18	3.38	3.20	8.43
5	KCR	49	56	11.38	5.22	3.51	8.18	2.15	2.24	2.40	8.40	3.20	3.38	7.15
4	KC	49	56	11.38	5.22	3.41	8.18	2.15	2.21	2.40	8.40	3.20	3.38	7.15
3	KC	46	56	10.78	4.62	2.81	8.18	2.15	2.81	2.40	8.40	3.20	3.38	6.55
2	KCR/KC	49	56	11.38	5.22	3.51	8.18	2.15	2.24	2.40	8.40	3.20	3.38	7.15
1	KCR/KC	46	56	10.78	4.62	2.91	8.18	2.15	2.84	2.15	8.18	3.20	3.20	6.55

SIGNATURES		DATE
MODEL	M.D.PAPE	03/02/92
DETAIL	.	.
CHECKED	.	.
ENGRG	.	.
MFG	.	.
QUALITY	.	.
ISSUED	M.D.PAPE	08/14/02

SOLID MODEL: 52A107782

FOR ADDITIONAL INFO REFER TO:

APPLIED PRACTICES .

DIMENSIONS ARE IN INCHES ✓

MATERIAL .

REGAL BELOIT

REGAL-BELOIT CORPORATION

TITLE

OUTLINE

GENERAL PURPOSE MOTOR - DRIP PROOF - BALL BEARING - WELD BASE

SIZE A | DRAWING 52A107782 | REV 16

SCALE: 0.003 | REF. No: . | SHEET 2 OF 2

Uncontrolled Copy

THIRD ANGLE PROJECTION

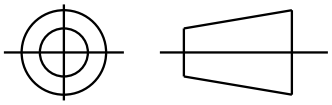

REVISIONS

REV.	DESCRIPTION	DATE	APPROVED
3	UPDATED FORMAT	01/05/06	MAM

EITHER ROTATION - DUAL VOLTAGE TYPE KCR OR KHC WITH THERMAL PROTECTOR

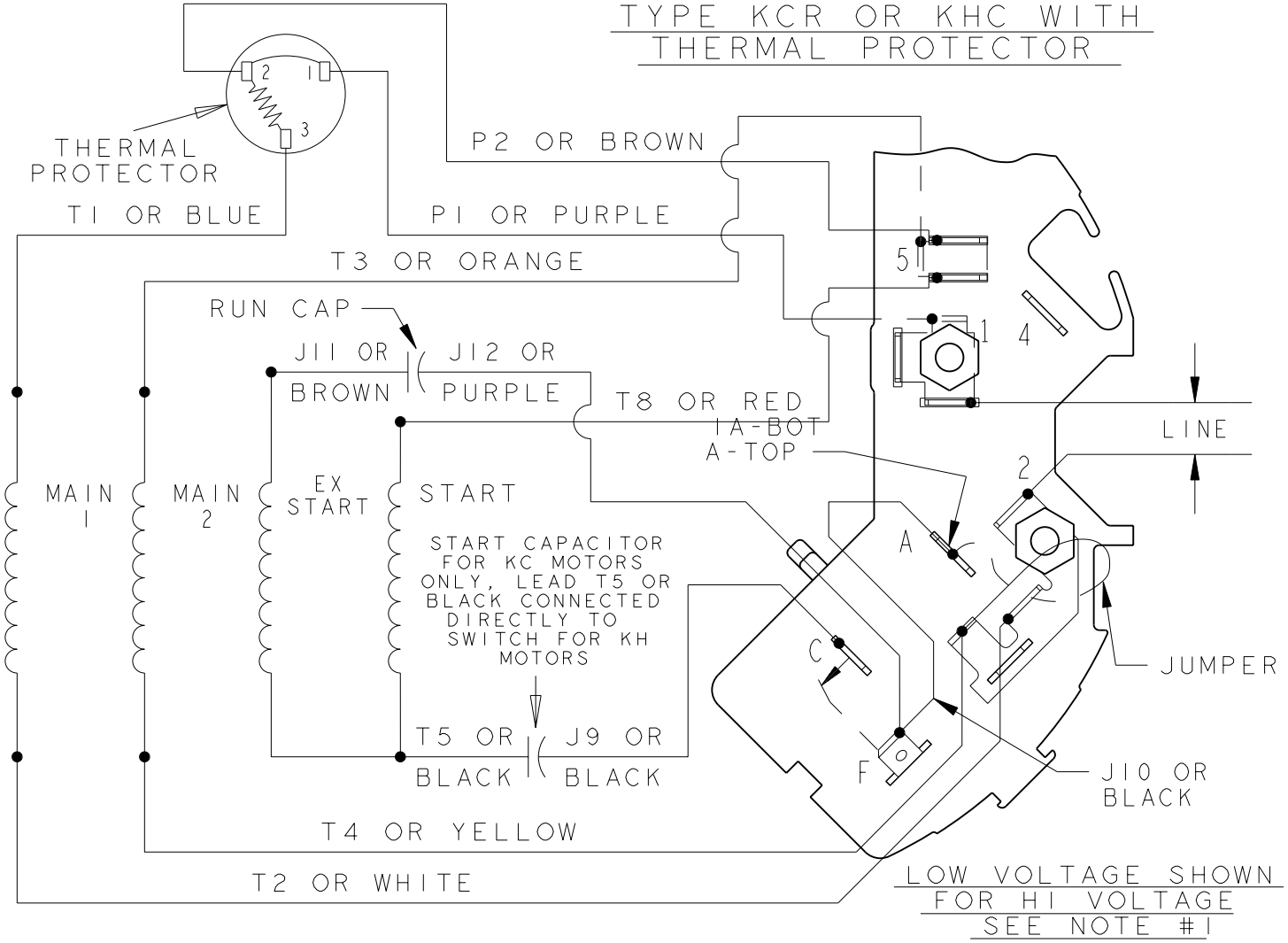

NOTE #1 - FOR HI VOLTAGE REMOVE BROWN (P2) FROM TERMINAL #5 AND PLACE ON TERMINAL #4, REMOVE WHITE (T2) FROM TERMINAL #2 AND PLACE ON TERMINAL #5.

NOTE #2 - TO REVERSE ROTATION INTERCHANGE BLACK (J10) AND RED (T8) LEADS.

NOTE #3 - WHEN MORE THAN ONE CAPACITOR IS USED CONNECT IN PARALLEL.

SWITCH - 115D958AC

REF. DIAG. - 119A9479

CONNECTION LABEL - 52X332051

SIGNATURES		DATE
MODEL	M.D.PAPE	10/19/87
DETAIL	.	.
CHECKED	.	.
ENGRG	.	.
MFG	.	.
QUALITY	.	.
ISSUED	M.D.P.	10/19/87

SOLID MODEL: 52A105383AB

FOR ADDITIONAL INFO REFER TO:
APPLIED PRACTICES .
DIMENSIONS ARE IN INCHES
MATERIAL .

REGAL BELOIT — REGAL-BELOIT CORPORATION

TITLE CONNECTION DIAGRAM

FMF: 30 FRAME SWITCH REDESIGN

SIZE A | DRAWING 52A105383AB | REV 3

SCALE: 1.000 | REF. No: . | SHEET 1 of 1

SHEET 1 | REV 3 | DRAWING NO. 52A105383AB | SIZE