PRODUCT INFORMATION PACKET

Model No: 609
Catalog No: 609
1/10 HP Refrigeration Motor, 1050 RPM, 115/230 Volts, 42 Frame, OAO

Refrigeration Motors

Regal and Century are trademarks of Regal Rexnord Corporation or one of its affiliated companies.
©2022 Regal Rexnord Corporation, All Rights Reserved. MC017097E

Nameplate Specifications

Output HP	**1/10 Hp**	Output KW	**0.07 kW**
Frequency	**60 Hz**	Voltage	**115/230 V**
Current	**4.6/2.3 A**	Speed	**1050 rpm**
Service Factor	**1**	Phase	**1**
Duty	**Continuous Air Over**	Insulation Class	**A**
Frame	**42None**	Enclosure	**Open Air Over**
Thermal Protection	**Thermally Protected**	Ambient Temperature	**40 °C**
UL	**Recognized**	CSA	**Y**
CE	**N**	Number of Speeds	**1**

Technical Specifications

Electrical Type	**Shaded Pole**	Starting Method	**Across The Line**
Poles	**6**	Rotation	**Counterclockwise Shaft End**
Mounting	**Resilient Rings**	Motor Orientation	**Horizontal**
Drive End Bearing	**Sleeve**	Opp Drive End Bearing	**Sleeve**
Frame Material	**Rolled Steel**	Shaft Type	**Flat**
Overall Length	**8.87 in**	Frame Length	**4.17 in**
Shaft Diameter	**0.375 in**	Shaft Extension	**3 1/4 in**
Outline Drawing	**DA3F7144-S01**		

This is an uncontrolled document once printed or downloaded and is subject to change without notice. Date Created:01/18/2022

Uncontrolled Copy

REV	ECO	REV BY	DATE	APPD	DATE
M	0028995	J.AGUILERA	10-25-2012	D.BALDERRAMA	10-25-2012

CUSTOMER IS SOLELY RESPONSIBLE FOR MOTOR PERFORMANCE AND SUITABILITY IN APPLICATIONS FOR CUSTOMER'S USES

ENDPLAY .005[0.13]MINIMUM–.040[1.02] MAXIMUM
MAXIMUM SHAFT RUN OUT .001[.03] PER INCH
MAXIMUM RUN OUT NOT TO EXCEED .010[.25]

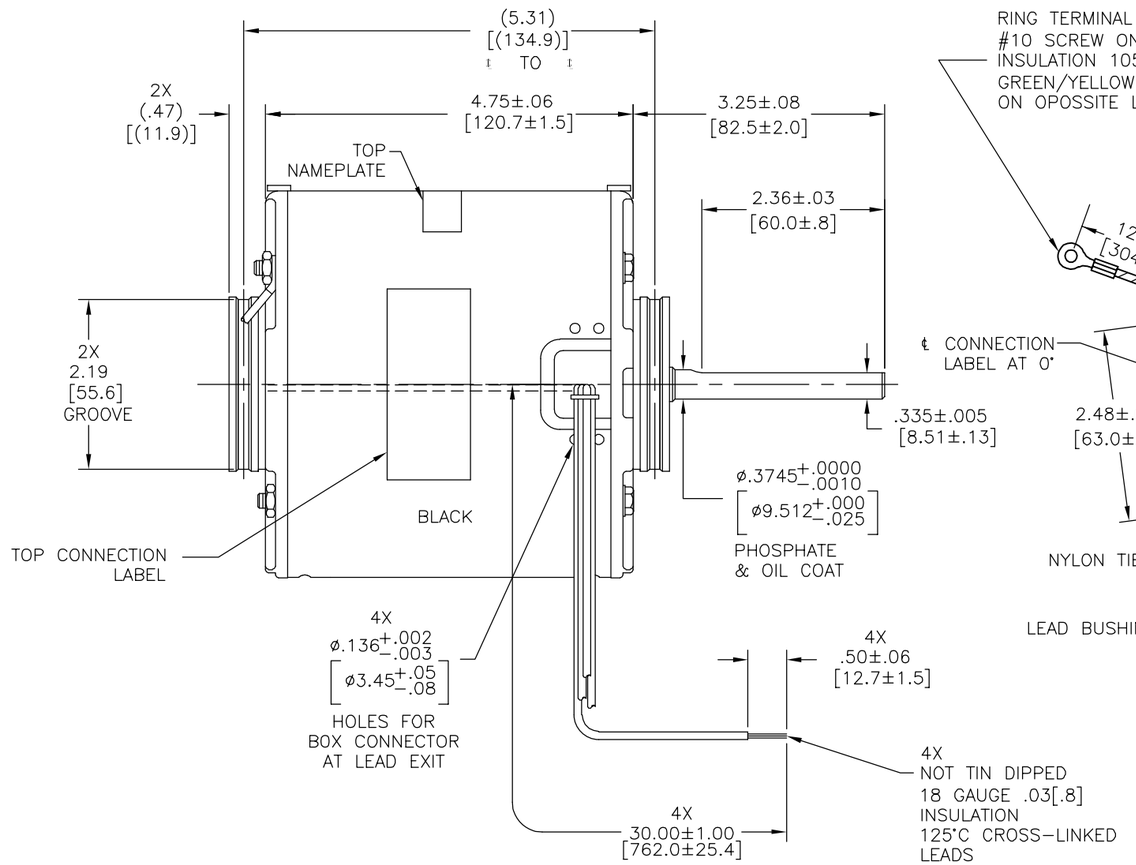

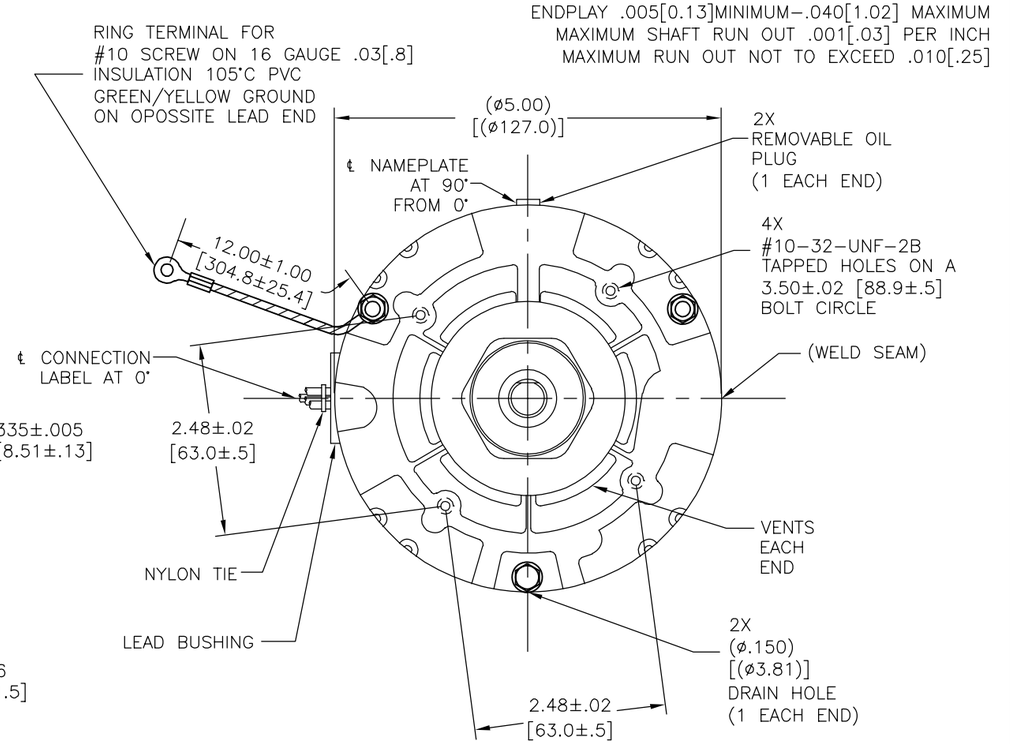

CONNECTION LABEL
63T7432-180

ROT: CCWLE–CCWSE

SCHEMATIC–277

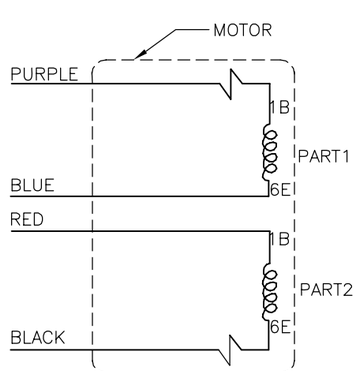

COLOR CODE	
115 V	PURPLE & RED TO LINE BLUE & BLACK TO LINE
230 V	PURPLE TO ONE LINE BLACK TO OTHER LINE RED & BLUE TOGETHER & INSULATION

ELECTRICALLY PER
SAMPLE S–7491D
EXCEPT 115/230V

NAMEPLATE DATA:

Century Tipp City, OH
THERMALLY PROTECTED

SER. DATE & PO# PLT LTR MOD DA3F144N# STK NO. 609
VOLTS 115/230 HZ 60 AMPS 4.6/2.3
RPM 1050 SP PH 1 CAP
INS CL AMB °C HP 1/10 CONT A.O. ← ROTATION
BRG SLV MECH. REV. ASSEMBLED IN MEXICO

GEOMETRIC CHARACTERISTICS & SYMBOLS
▱ FLATNESS
— STRAIGHTNESS
∠ ANGULARITY
⊥ PERPENDICULARITY (SQUARENESS)
// PARALLELISM
○ ROUNDNESS (CIRCULARITY)
⌭ CYLINDRICITY
⌓ PROFILE OF ANY SURFACE
⌒ PROFILE OF ANY LINE
↗ RUNOUT
⌖ TRUE POSITION
◎ CONCENTRICITY
⌯ SYMMETRY
ASME Y14.5M 1994

UNLESS OTHERWISE SPECIFIED
DIM. TOLERANCES ARE AS FOLLOWS:

	X	XX	XXX	XXXX
INCH	±.1	±.02	±.005	±.0005
mm	±0.5	±0.13	±0.013	

ANG. ±.50 DEG
REMOVE BURRS & BREAK SHARP EDGES:
INCH .003–.015 mm 0.1–0.4
CORNER FILLETS TO:
INCH .020 mm 0.5
MACHINE SURFACES:
INCH 125 mm 3.2
METRIC DIMS. SHOWN IN [BRACKETS]

DR BY: TLB	01-07-1999	
APPD: DRB	01-07-1999	
THIRD ANGLE PROJECTION	EDS DATE 11-11-2011	
	FORMAT REV H	

CONFIDENTIAL: THIS DRAWING AND ITS INFORMATION ARE THE EXCLUSIVE AND CONFIDENTIAL PROPERTY OF REGAL–BELOIT CORPORATION AND ARE NOT TO BE DISCLOSED, DUPLICATED, DISTRIBUTED OR OTHERWISE USED WITHOUT THE WRITTEN CONSENT OF REGAL–BELOIT CORPORATION. –ALL RIGHTS RESERVED.

REGAL REGAL-BELOIT CORPORATION

DESCRIPTION
MODEL–RFHP–42FR
OUTLINE

SIZE	DWG NO	
C	DA3F7144	
SCALE NONE		SHEET 1

Uncontrolled Copy

REVISION:	ECO	REVISADO POR:	FECHA:	APROBADO POR:	FECHA:
M	0028995	J.AGUILERA	10-25-2012	D.BALDERRAMA	10-25-2012

EL CLIENTE ES UNICAMENTE RESPONSABLE POR EL DESEMPEÑO DEL MOTOR Y APLICACIONES APROPIADAS PARA SU USO

JUEGO AXIAL .005[0.13]MINIMO-.040[1.02]MAXIMO
OSCILAMIENTO MAXIMO DE LA FLECHA .001[.03]POR PULGADA
OSCILAMIENTO MAXIMO NO DEBERA EXCEDER .010[.25]

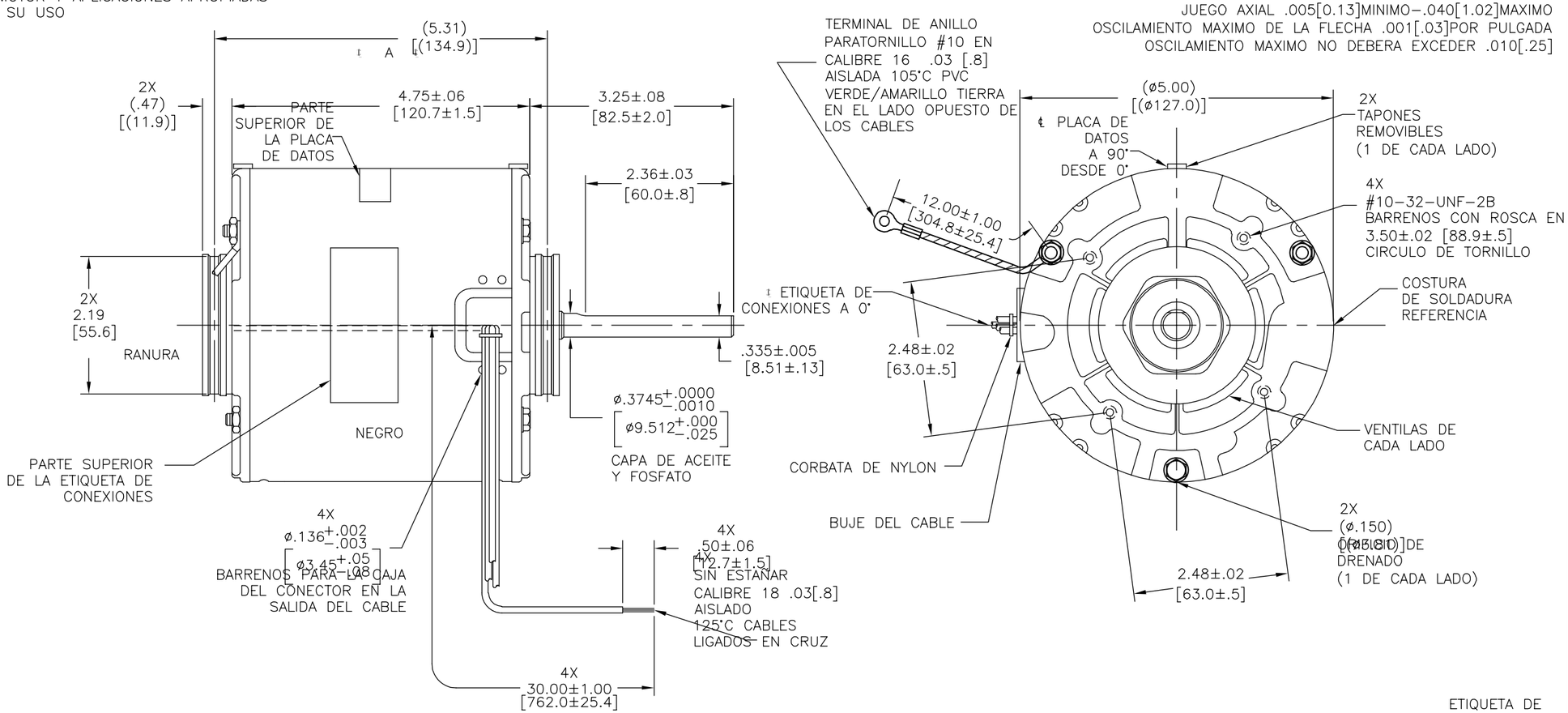

ETIQUETA DE CONEXION 63T7432-180

ROT: CCWLE-CCWSE

DIAGRAMA-277

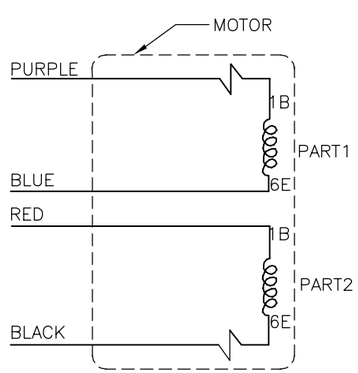

CODIGO DE COLOR	
115 V	MORADO Y ROJO A LA LINEA AZUL Y NEGRO A LA LINEA
230 V	MORADO A UNA LINEA NEGRO A LA OTRA LINEA ROJO Y AZUL JUNTOS Y AISLADOS

ELECTRICAMENTE SEGUN MUESTRA S-7491D EXCEPTO 115/230V

PLACA DE DATOS:

Century Tipp City, OH THERMALLY PROTECTED

SER. DATE & PO# PLT LTR MOD DA3F144N# STK NO. 609
VOLTS 115/230 HZ 60 AMPS 4.6/2.3
RPM 1050 SP PH 1 CAP
INS CL AMB °C HP 1/10 CONT A.O. ← ROTATION
BRG SLV MECH. REV. ASSEMBLED IN MEXICO

CARACTERISTICAS DE GEOMETRIA Y SIMBOLOS
- PLANICIDAD
- RECTITUD
- ANGULARIDAD
- PERPENDICULARIDAD (A ESCUADRA)
- PARALELISMO
- REDONDEZ (CIRCULARIDAD)
- CILINDRICIDAD
- PERFIL DE CUALQUIER SUPERFICIE
- PERFIL DE CUALQUIER LINEA
- VARIACION
- POSICION REAL
- CONCENTRICIDAD
- SIMETRIA

ASME Y14.5M 1994

A MENOS QUE SE ESPECIFIQUE DE OTRA MANERA, LAS TOLERANCIAS DE LAS DIMS; SON LAS SIGUIENTES:

	X	XX	XXX	XXXX
PULG	±.1	±.02	±.005	±.0005
mm	±0.5	±0.13	±0.013	

ANG. ±.50 GRADOS
ELIMINAR REBABAS Y ORILLAS FILOSAS DEL BORDE.
PULG .003-.015 mm 0.1-0.4
FILETEAR ESQUINA: PULG .020 mm 0.5
MAQUINAR SUPERFICIES
PULG 125 mm 3.2
DIMS METRICAS MOSTRADAS [PARENTESIS]

DIBUJADO POR: TLB	01-07-1999	
APROBADO POR: DRB	01-07-1999	
TERCER ANGULO DE PROYECCION	FECHA EDS: 11-11-2011	REV. FORMATO: H

CONFIDENCIAL: ESTE DIBUJO Y SU INFORMACION SON PROPIEDAD DE USO EXCLUSIVO Y CONFIDENCIAL DE REGAL-BELOIT CORPORATION. Y NO DEBERAN SER REVELADOS, DUPLICADOS, DISTRIBUIDOS O USARSE DE OTRA MANERA SIN EL CONSENTIMIENTO ESCRITO DE REGAL-BELOIT CORPORATION. -TODOS LOS DERECHOS RESERVADOS.

REGAL REGAL-BELOIT CORPORATION

DESCRIPCION: MODEL-RFHP-42FR OUTLINE

TAMAÑO: C | NUMERO DE DIBUJO: DA3F7144

ESCALA: NONE | HOJA: 1

Uncontrolled Copy

版本	ECO	編制	日期	批准	日期
M	0028995	J.AGUILERA	10-25-2012	D.BALDERRAMA	10-25-2012

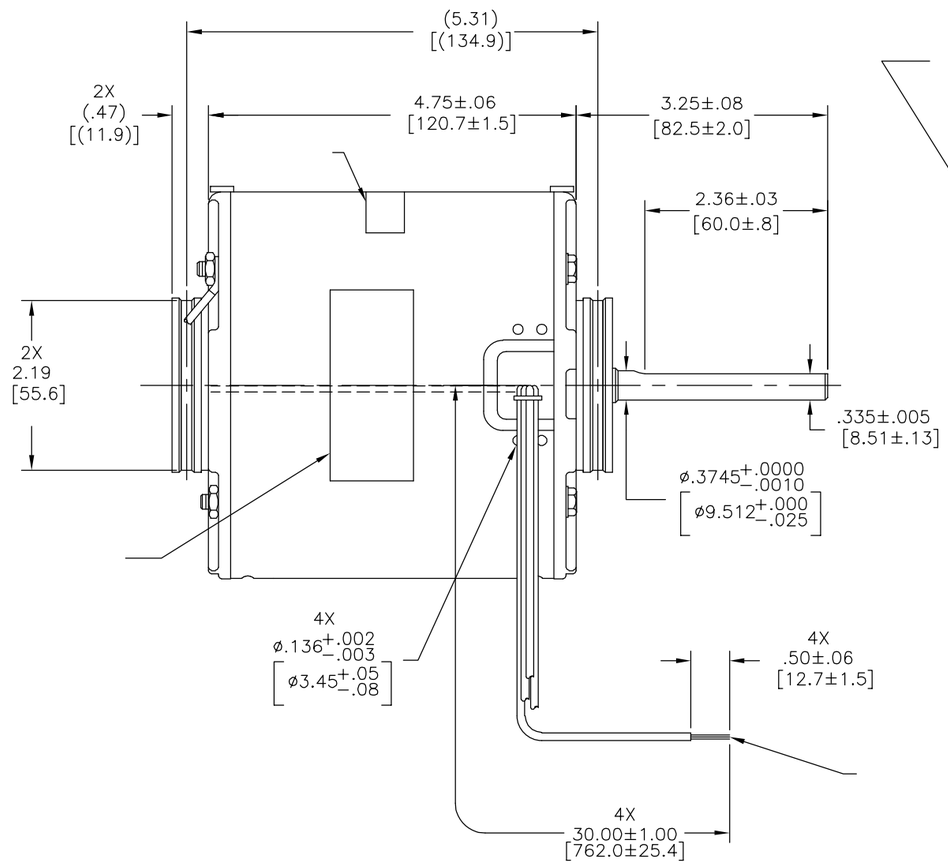

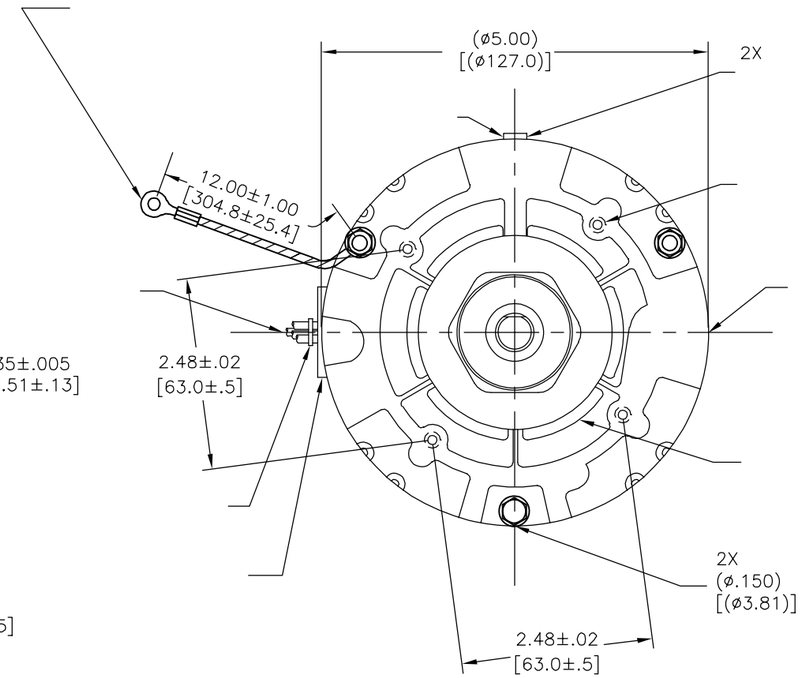

ROT: CCWLE-CCWSE

Century Tipp City, OH
THERMALLY PROTECTED
SER. DATE & PO# PLT LTR MOD DA3F144N# STK NO. 609
VOLTS 115/230 HZ 60 AMPS 4.6/2.3
RPM 1050 SP PH 1 CAP
INS CL AMB °C HP 1/10 CONT A.O. ← ROTATION
BRG SLV MECH. REV. ASSEMBLED IN MEXICO

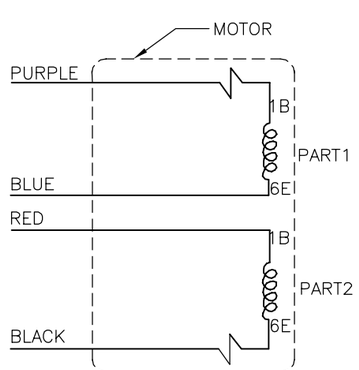

115 V	
230 V	

形位公差
▱ 平面度
— 直线度
∠ 倾斜度
⊥ 垂直度
// 平行度
○ 圆度
⌭ 圆柱度
⌓ 面轮廓度
⌒ 线轮廓度
↗ 圆跳动
⌖ 位置度
◎ 同轴度
⌯ 对称度

ASME Y14.5M 1994

除另有注明
尺寸公差如下:

	X	XX	XXX	XXXX
英寸	±.1	±.02	±.005	±.0005
毫米	±0.5	±0.13	±0.013	

角度 ±.50 度
清理毛刺和尖棱
英寸 .003-.015 毫米 0.1-0.4
内圆角
英寸 .020 毫米 0.5
表面粗糙度
英制 125 米制 3.2
米制尺寸显示在[ ]

绘图:	TLB	01-07-1999
批准:	DRB	01-07-1999
第三角投影	图纸格式发布日期	11-11-2011
	图纸格式版本	H

机密: 本图纸及相关信息所有权归REGAL-BELOIT CORPORATION,
未经REGAL-BELOIT CORPORATION书面授权, 不得泄露、
复制、传播或作其他用途。--版权所有

REGAL-BELOIT CORPORATION

名称 MODEL-RFHP-42FR OUTLINE

图幅 C 图号 DA3F7144

比例 NONE 页号 1