PRODUCT INFORMATION PACKET

Model No: 9687
Catalog No: 9687
Fan Coil & Air Conditioner Motor, 1/4 HP, 1 Ph, 60/50 Hz, 115 V, 1550 RPM, 3 Speed, 48 Frame, SEMI ENCL

Regal and Century are trademarks of Regal Rexnord Corporation or one of its affiliated companies.
©2025 Regal Rexnord Corporation, All Rights Reserved. MC017097E

Nameplate Specifications

Phase	1	Output HP	1/4 Hp
Output KW	0.19 kW	Voltage	115 V
Speed	1550 rpm	Service Factor	1.0
Frame	48Y	Enclosure	Semi Enclosed
Thermal Protection	Automatic	Ambient Temperature	40 °C
Frequency	60/50 Hz	Current	4.9 A
Duty	Air Over	Insulation Class	B
UL	Recognized	CSA	Y
CE	N	Number of Speeds	3

Technical Specifications

Electrical Type	Permanent Split Capacitor	Starting Method	Across The Line
Poles	4	Rotation	Counterclockwise Lead End
Mounting	Extended Studs	Motor Orientation	Horizontal
Drive End Bearing	Sleeve	Opp Drive End Bearing	Sleeve
Frame Material	Rolled Steel	Shaft Type	Flat
Overall Length	20.00 in	Frame Length	3.38 in
Shaft Diameter	0.500 in	Shaft Extension	7.5X.5X8.0 in
Outline Drawing	9687-S01	Connection Drawing	614131-106

This is an uncontrolled document once printed or downloaded and is subject to change without notice. Date Created:06/18/2025

Uncontrolled Copy

REV	ECO	REV BY	DATE	APPD	DATE
B	ECO-0024313	C.ZHANG	02-16-2012	B.C.SHEN	02-16-2011

GENERAL INFORMATION:

SHAFT RUNOUT: .001[.03] T.I.R. PER INCH LENGTH OF EXTENSION.

END PLAY: .010[.25] TO .063[1.60]

BEARINGS: SLEEVE

MOUNTING POSITION: HORIZONTAL

ELECTRICAL DATA:

OVERLOAD PROTECTOR: AUTOMATIC RESET (T.I. 7AM 036)

LEADS: NO. 18 GA., .06[1.5] THK. PVC 105°C INSUL.

GROUND LEAD: NO. 18 GA., .03[.8] THK., (GREEN) INSUL.

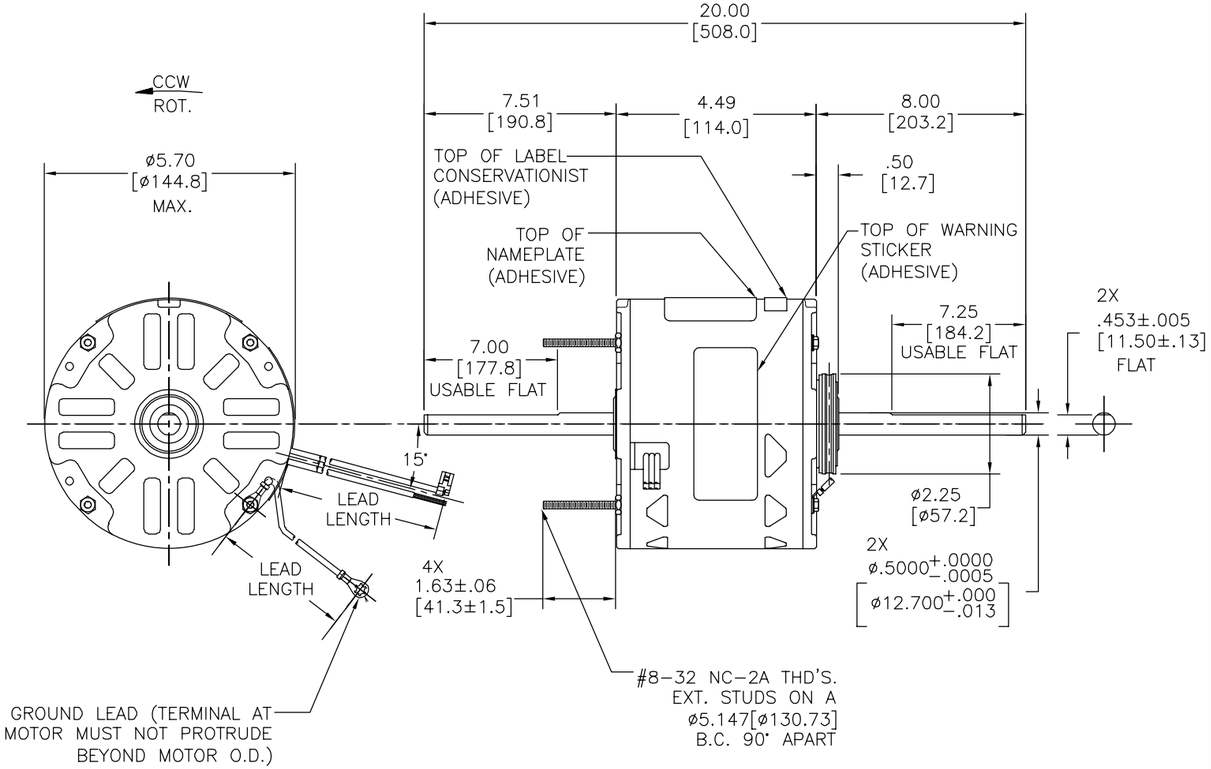

NAMEPLATE DATA:	EXTERNAL CONNECTION DIAGRAM
MODEL NO.: F48V56A01 CUST. P/N: 9687 HP: 1/4 ROT.: CCWLE RPM: 1550/3 SPD. TYPE: UF FRAME: 48Y VOLTS: 115 PH: 1 AMPS: 4.9 HZ: 50/60 INS.: B AMB.: 40° C DUTY: AIR OVER CAP.: 4 MFD/370V ENCL: SEMI-ENCL. CSA LOGO UL LOGO THERMALLY PROTECTED	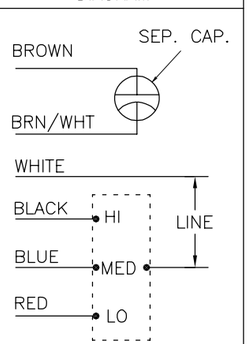

614131-106

PERFORMANCE CURVE NO.	TORQUE @ 1550 RPM (25°C)	APPROVED SAMPLE	UL COMPONENT		CSA	
			FILE #	CCN #	FILE #	CLASS #
C32386	20.4 OZ. FT.	0442621B	E46412	PRGY2	LR43341	4211-01

GRN/YEL (GRD)	11.0/13.0 [279/330]	#10 EYELET
BROWN/WHITE	11.0/13.0 [279/330]	.25[6.4] FLAG
BROWN	11.0/13.0 [279/330]	.25[6.4] FLAG
WHITE	13.0/15.0 [330/381]	.50[12.7] SKIN
BLACK	13.0/15.0 [330/381]	.50[12.7] SKIN
BLUE	13.0/15.0 [330/381]	.50[12.7] SKIN
RED	13.0/15.0 [330/381]	.50[12.7] SKIN
COLOR	LENGTH	TERMINAL OR STRIP LENGTH

LEAD DATA

NOTE:
615059-001 RESILENT MOUNTING KIT
TO BE PACKED WITH MOTOR.

MAIN FRAME - OLE	SEMI-ENCLOSED
END FRAME - OLE	OPEN
MAIN FRAME - LE	SEMI-ENCLOSED
END FRAME - LE	OPEN

ENCLOSURE

CUSTOMER	DISTRIBUTION SERVICE

GEOMETRIC CHARACTERISTICS & SYMBOLS
- ▱ FLATNESS
- — STRAIGHTNESS
- ∠ ANGULARITY
- ⊥ PERPENDICULARITY (SQUARENESS)
- // PARALLELISM
- ○ ROUNDNESS (CIRCULARITY)
- ⌭ CYLINDRICITY
- ⌓ PROFILE OF ANY SURFACE
- ⌒ PROFILE OF ANY LINE
- ↗ RUNOUT
- ⌖ TRUE POSITION
- ◎ CONCENTRICITY
- ⌯ SYMMETRY

ASME Y14.5M 1994

REGAL-BELOIT CORPORATION (RBC) PROVIDES TECHNICAL ASSISTANCE TO OUR CUSTOMERS IN SEVERAL AREAS. SINCE RBC DOES NOT RECEIVE ALL DATA CONCERNING THE USE AND APPLICATION OF THE MOTOR, THE SUITABILITY OF THE MOTOR FOR THE APPLICATION MUST BE DETERMINED BY THE CUSTOMER.

DIMENSIONS WITHOUT TOLERANCES ARE FOR REFERENCE ONLY.

DR BY: C.ZHANG	02-16-2012
APPD: B.C.SHEN	02-16-2012
THIRD ANGLE PROJECTION	EDS DATE 11-11-2011
	FORMAT REV G

CONFIDENTIAL: THIS DRAWING AND ITS INFORMATION ARE THE EXCLUSIVE AND CONFIDENTIAL PROPERTY OF REGAL-BELOIT CORPORATION AND ARE NOT TO BE DISCLOSED, DUPLICATED, DISTRIBUTED OR OTHERWISE USED WITHOUT THE WRITTEN CONSENT OF REGAL-BELOIT CORPORATION. -ALL RIGHTS RESERVED.

REGAL-BELOIT CORPORATION

DESCRIPTION: MODEL-RFHP-48FR OUTLINE

SIZE: C | DWG NO: 9687

SCALE: NONE | SHEET 1

Uncontrolled Copy

REVISION:	ECO	REVISADO POR:	FECHA:	APROBADO POR:	FECHA:
B	ECO-0024313	C.ZHANG	02-16-2012	B.C.SHEN	02-16-2011

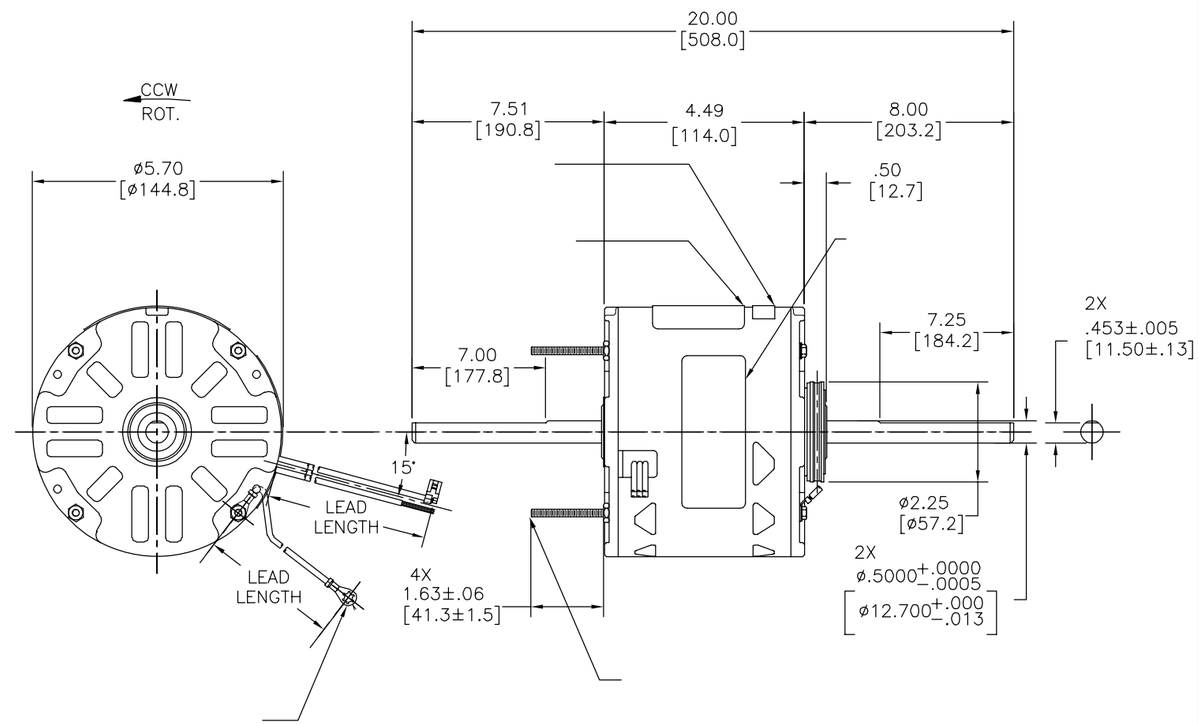

MODEL NO.: F48V56A01
CUST. P/N: 9687
HP: 1/4
ROT.: CCWLE
RPM: 1550/3 SPD.
TYPE: UF
FRAME: 48Y
VOLTS: 115
PH: 1
AMPS: 4.9
HZ: 50/60
INS.: B
AMB.: 40° C
DUTY: AIR OVER
CAP.: 4 MFD/370V
ENCL: SEMI-ENCL.
CSA LOGO
UL LOGO
THERMALLY PROTECTED

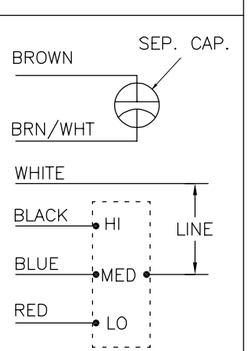

614131-106

C32386	20.4 OZ. FT.	0442621B	E46412	PRGY2	LR43341	4211-01

	11.0/13.0 [279/330]	
	11.0/13.0 [279/330]	
	11.0/13.0 [279/330]	
	13.0/15.0 [330/381]	
	13.0/15.0 [330/381]	
	13.0/15.0 [330/381]	
	13.0/15.0 [330/381]	

DISTRIBUTION SERVICE

CARACTERISTICAS DE GEOMETRIA Y SIMBOLOS
- PLANICIDAD
- RECTITUD
- ANGULARIDAD
- PERPENDICULARIDAD (A ESCUADRA)
- PARALELISMO
- REDONDEZ (CIRCULARIDAD)
- CILINDRICIDAD
- PERFIL DE CUALQUIER SUPERFICIE
- PERFIL DE CUALQUIER LINEA
- VARIACION
- POSICION REAL
- CONCENTRICIDAD
- SIMETRIA

ASME Y14.5M 1994

REGAL-BELOIT CORPORATION (RBC) PROVEE ASISTENCIA TECNICA A NUESTROS CLIENTES EN VARIAS AREAS. DESDE QUE RBC NO RECIBE TODOS LOS DATOS EN RELACION AL USO Y A LA APLICACION DEL MOTOR, LA APLICACION ADECUADA DEL MOTOR DEBE SER DETERMINADA POR EL CLIENTE.

DIMENSIONES SIN TOLERANCIA SON DE REFERENCIA SOLAMENTE

DIBUJADO POR: C.ZHANG 02-16-2012
APROBADO POR: B.C.SHEN 02-16-2012
TERCER ANGULO DE PROYECCION
FECHA EDS: 11-11-2011
REV. FORMATO: G

CONFIDENCIAL: ESTE DIBUJO Y SU INFORMACION SON PROPIEDAD DE USO EXCLUSIVO Y CONFIDENCIAL DE REGAL-BELOIT CORPORATION. Y NO DEBERAN SER REVELADOS, DUPLICADOS, DISTRIBUIDOS O USARSE DE OTRA MANERA SIN EL CONSENTIMIENTO ESCRITO DE REGAL-BELOIT CORPORATION. -TODOS LOS DERECHOS RESERVADOS.

REGAL-BELOIT CORPORATION

DESCRIPCION: MODEL-RFHP-48FR OUTLINE

TAMAÑO: C
NUMERO DE DIBUJO: 9687
ESCALA: NONE
HOJA: 1

Uncontrolled Copy

版本	ECO	编制	日期	批准	日期
B	ECO-0024313	C.ZHANG	02-16-2012	B.C.SHEN	02-16-2011

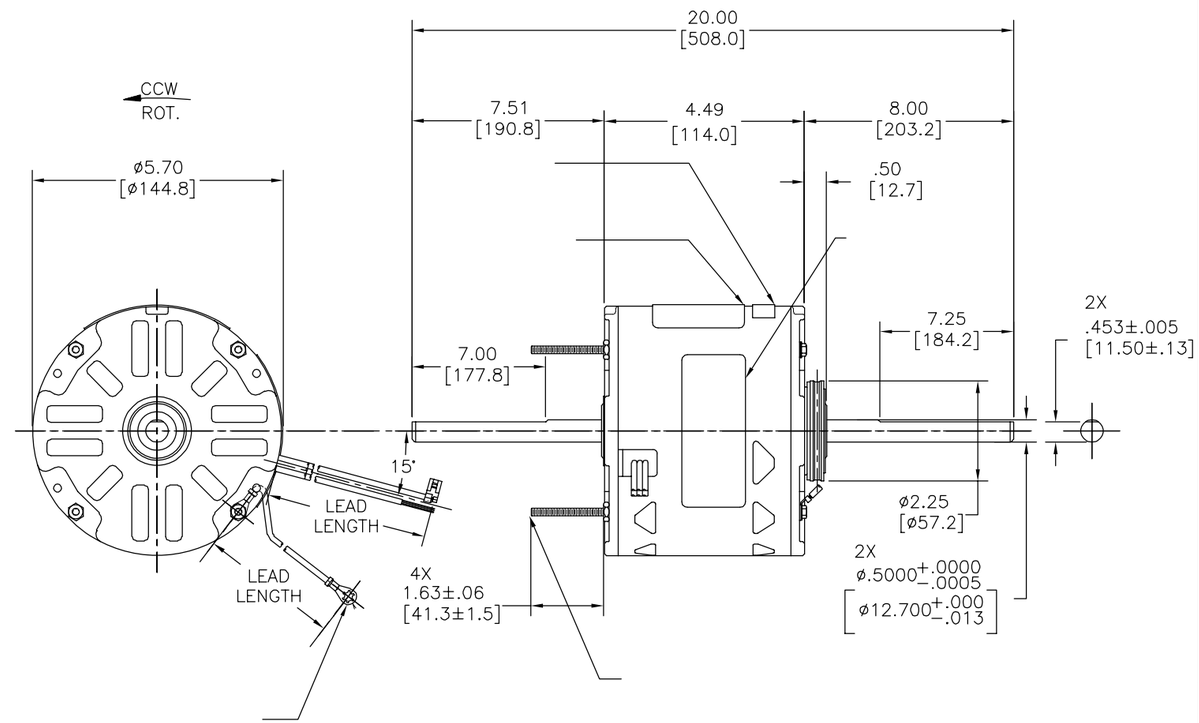

MODEL NO.: F48V56A01
CUST. P/N: 9687
HP: 1/4
ROT.: CCWLE
RPM: 1550/3 SPD.
TYPE: UF
FRAME: 48Y
VOLTS: 115
PH: 1
AMPS: 4.9
HZ: 50/60
INS.: B
AMB.: 40° C
DUTY: AIR OVER
CAP.: 4 MFD/370V
ENCL: SEMI-ENCL.
CSA LOGO
UL LOGO
THERMALLY PROTECTED

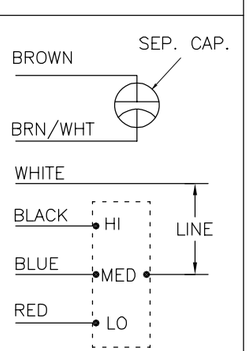

614131-106

	11.0/13.0 [279/330]	
	11.0/13.0 [279/330]	
	11.0/13.0 [279/330]	
	13.0/15.0 [330/381]	
	13.0/15.0 [330/381]	
	13.0/15.0 [330/381]	
	13.0/15.0 [330/381]	

C32386	20.4 OZ. FT.	0442621B	E46412	PRGY2	LR43341	4211-01

DISTRIBUTION SERVICE

形位公差
平面度
直线度
倾斜度
垂直度
平行度
圆度
圆柱度
面轮廓度
线轮廓度
圆跳动
位置度
同轴度
对称度
ASME Y14.5M 1994

REGAL-BELOIT CORPORATION (RBC)在个别领域为客户提供技术支持。鉴于RBC未收到任何涉及电机使用和应用环境的数据，电机的适用性由客户自己决定。

未注公差尺寸仅供参考。

绘图:	C.ZHANG	02-16-2012
批准:	B.C.SHEN	02-16-2012
第三角投影	图纸格式发布日期	11-11-2011
	图纸格式版本	G

机密：本图纸及相关信息所有权归REGAL-BELOIT CORPORATION。未经REGAL-BELOIT CORPORATION书面授权，不得泄露、复制、传播或作其他用途。—版权所有

REGAL-BELOIT CORPORATION

名称: MODEL-RFHP-48FR OUTLINE

图幅: C | 图号: 9687

比例: NONE | 页号: 1

Uncontrolled Copy

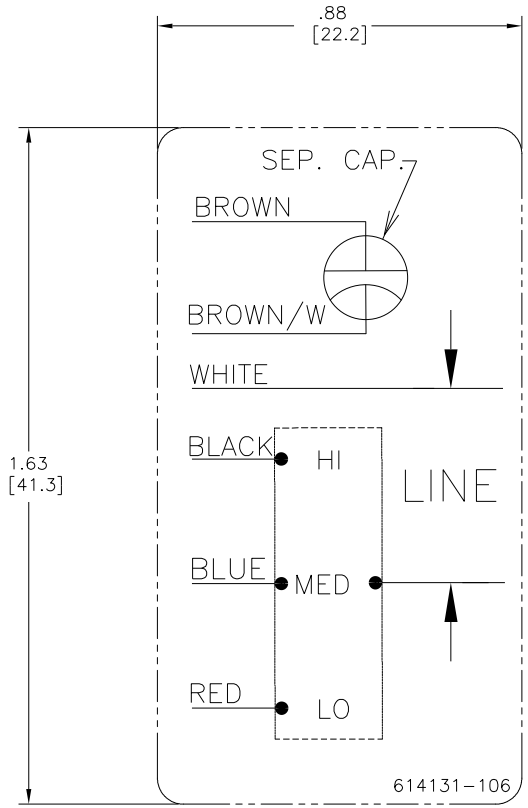

NOTES:

1. FOR USE WITH 614129 OR 2513020-001 NAMEPLATE BLANKS
2. ———— INDICATES DIMENSION LIMITS

DRAWING REVISION	REVISION BY	DATE
D	J. RUPERT	09-08-2022
ECO	APPROVED BY	DATE
NMR-0216370	J. RUPERT	09-08-2022
ECO DESCRIPTION		
REVISED FOR UP ISSUE		

COPYRIGHT REGAL BELOIT AMERICA, INC. ALL RIGHTS RESERVED.
PROPRIETARY AND CONFIDENTIAL INFORMATION - THIS DOCUMENT IS THE PROPERTY OF REGAL BELOIT AMERICA, INC. ("OWNER") AND CONTAINS OWNER'S PROPRIETARY INFORMATION. ANY PERSON, CORPORATION OR OTHER FIRM RECEIVING IT IS DEEMED, BY RECEIVING IT, TO AGREE THAT IT, AND/OR ANY PART OF IT, SHALL NOT BE DISCLOSED TO ANY PERSON, CORPORATION OR OTHER ENTITY, DUPLICATED, AND/OR USED, EXCEPT AS EXPRESSLY APPROVED IN WRITING IN ADVANCE BY OWNER. THIS DOCUMENT SHALL BE RETURNED TO OWNER UPON REQUEST. IT MAY BE SUBJECT TO CERTAIN RESTRICTIONS UNDER APPLICABLE EXPORT CONTROL LAWS AND REGULATIONS.

TOLERANCES UNLESS OTHERWISE SPECIFIED

DEC.	INCH	mm	ANGLE
X	±0.1	[±2.5]	±0.5°
.XX	±0.02	[±0.51]	
.XXX	±0.005	[±0.127]	
.XXXX	±0.0005	[±0.0127]	

REMOVE BURRS & BREAK SHARP EDGES .003/.015 [.076/.381] X 45°
CORNER FILLETS R.02 [.51]
MACHINED SURFACES INCH 125/ mm 3.2/
mm SHOWN IN [BRACKETS]

DRAWN BY: PZ
DATE: 04-12-2011
APPROVED BY: Tiger Wang
DATE: 04-12-2011
REFERENCE: .
THIRD ANGLE PROJECTION

Regal Beloit America, Inc.

DESCRIPTION: CONN-DIAGRAM
NAMEPLATE

MATERIAL: .
PROCESS/FINISH: .

SIZE	DWG NO	SHEET
C	614131-106	1